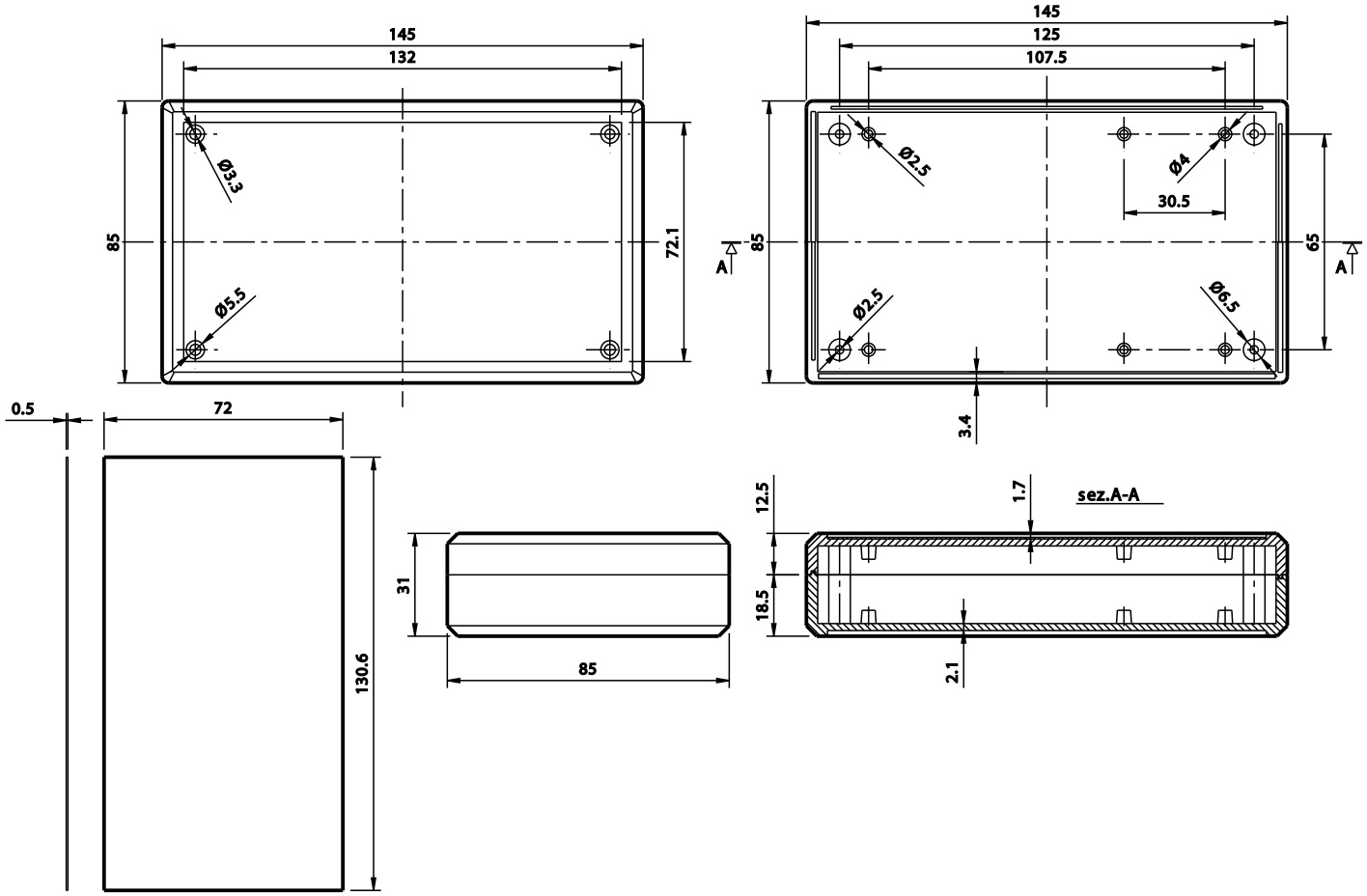
145
132
Ø3.3
85
72.1
Ø5.5
145
125
107.5
Ø2.5
Ø4
30.5
85
65
A
A
Ø2.5
Ø6.5
3.4
0.5
72
130.6
31
85
12.5
1.7
sez.A-A
18.5
2.1

560