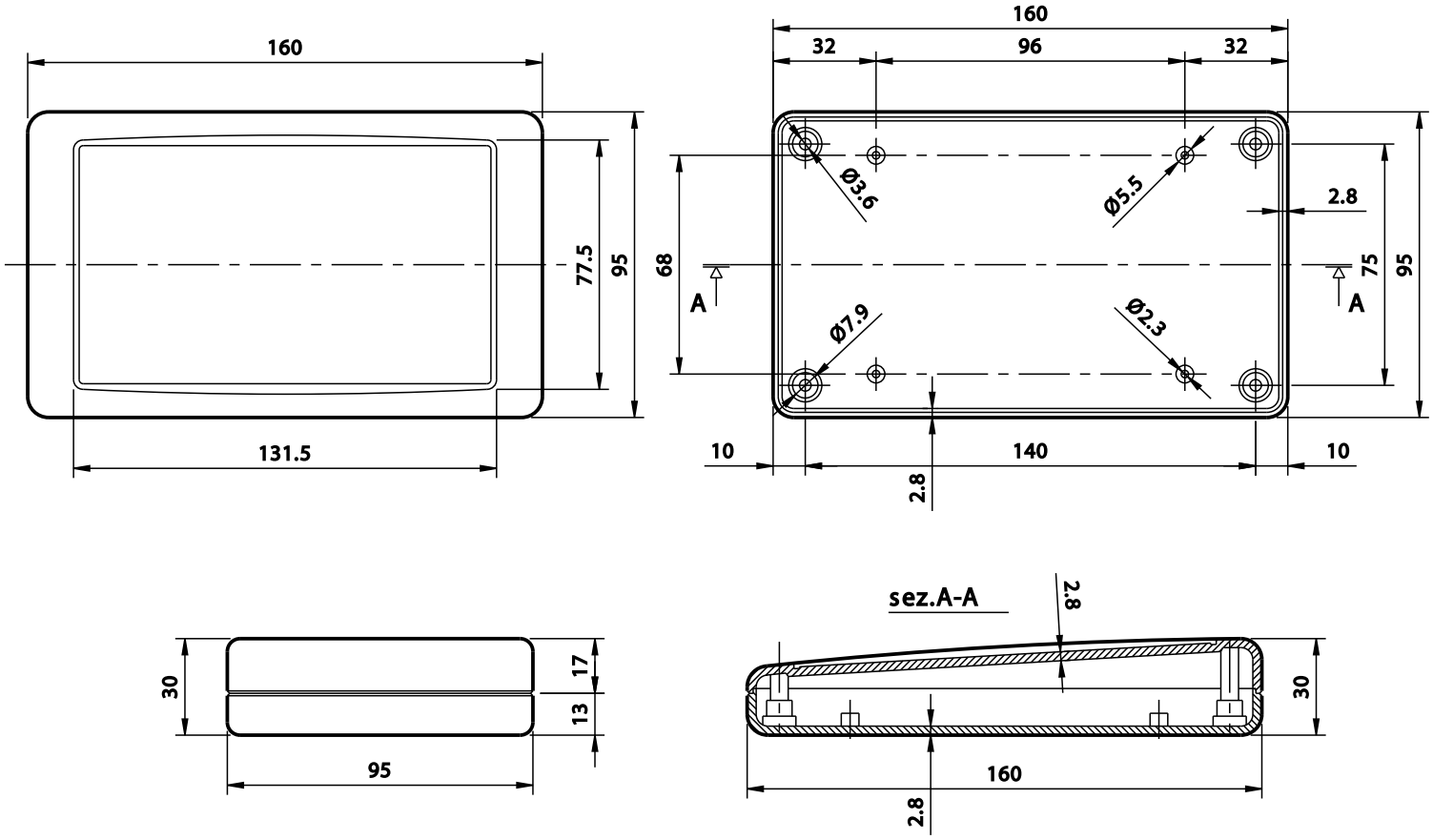
160
77.5
95
131.5
160
32
96
32
Ø3.6
Ø5.5
2.8
68
A
75
95
A
Ø7.9
Ø2.3
10
140
10
2.8
sez.A-A
2.8
30
17
13
95
30
160
2.8

SM1.S