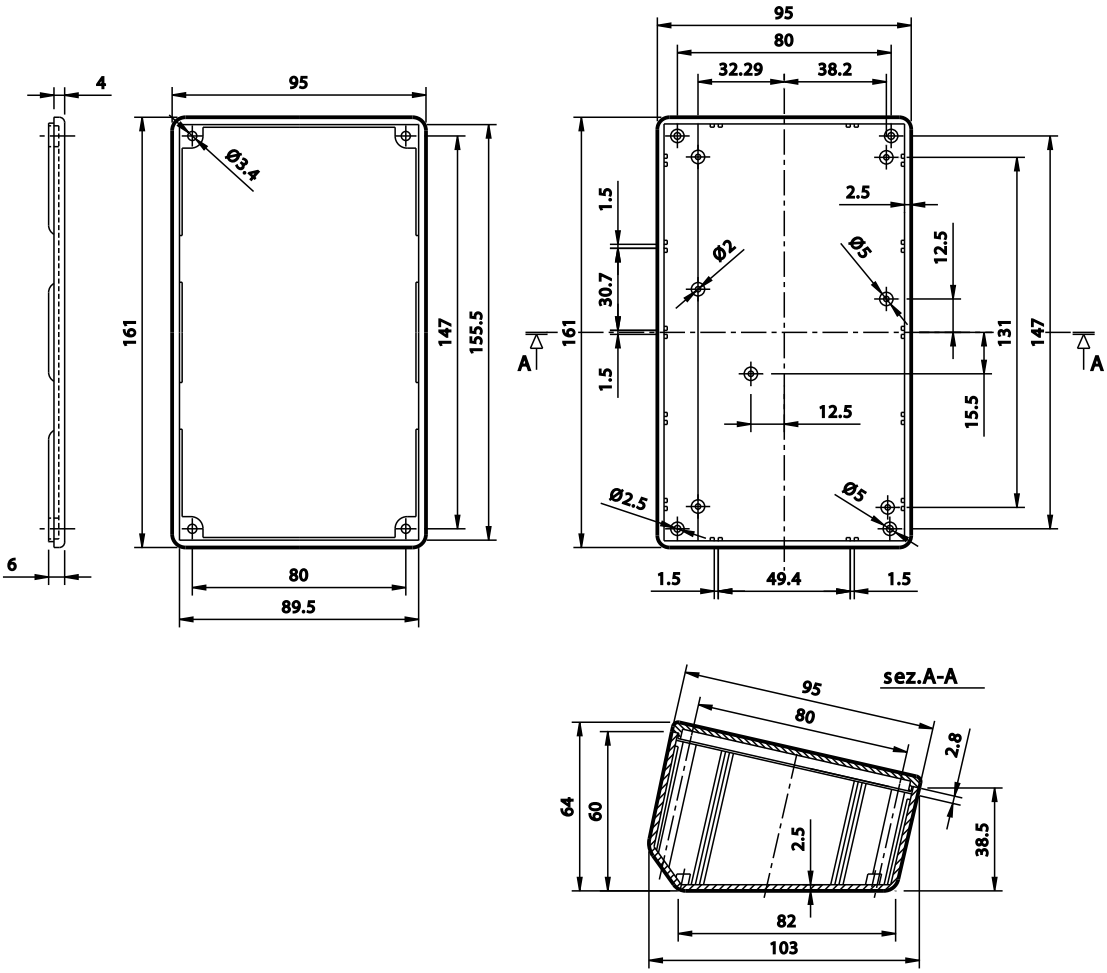
4
95
Ø3.4
161
147
155.5
6
80
89.5
95
80
32.29
38.2
1.5
30.7
1.5
161
A
2.5
Ø2
Ø5
12.5
131
147
A
12.5
15.5
Ø2.5
Ø5
1.5
49.4
1.5
sez.A-A
95
80
2.8
64
60
2.5
38.5
82
103

115 P