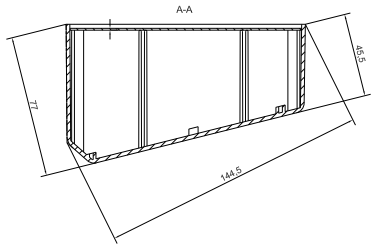

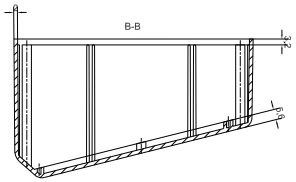

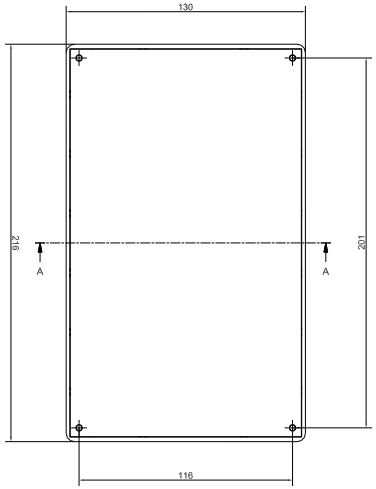

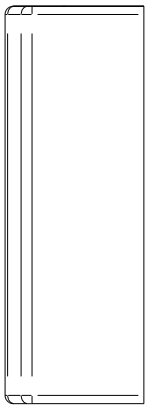

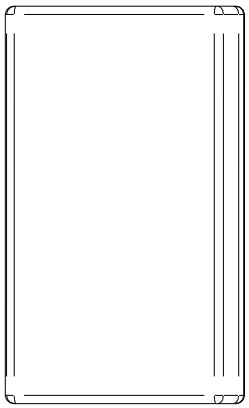

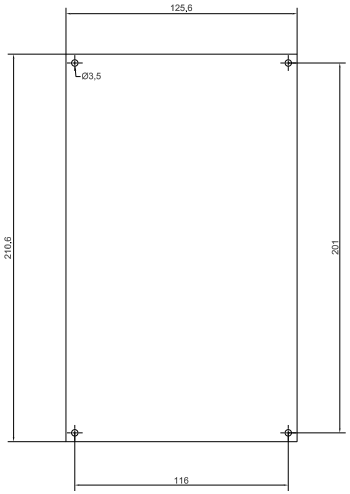

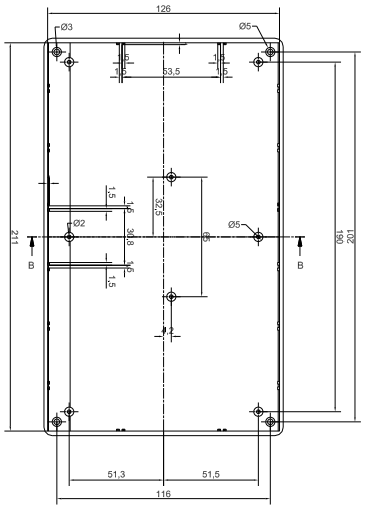

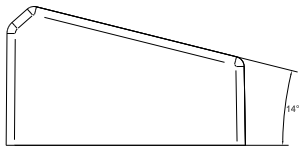

PCB MAX SIZE

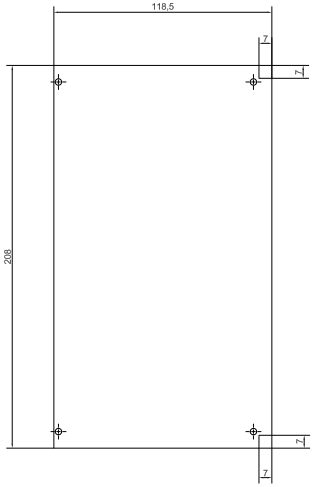

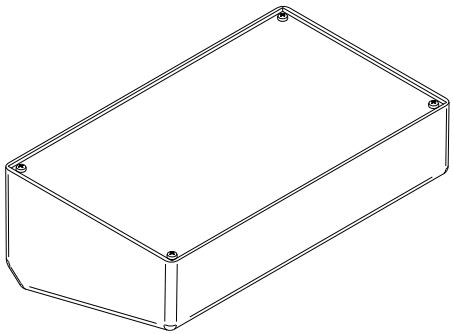

TEKO ENCLOSURES	Assembly 215	215
	Subject to technical modification without prior notice. Tipographical and other errors do not justify any claim for damage. All dimensions should be verified using an actual moulded part.	Rev. Date / Scale
	This document contains proprietary information of TEKO S.p.a. and is tendered subject to the conditions that the information be retained in confidence not be reproduced or copied and not be used or incorporated in any product.	Date 14/12/2005 / Format design A0